Methanation of Coke Oven Gas with Nickel-based catalysts

KLAUS MÜLLER[1], FABIAN RACHOW[1], VIVIEN GÜNTHER[2], DIETER SCHMEISSER[1]
[1]Department of Applied Physics
Brandenburg University of Technology Cottbus-Senftenberg
Platz der Deutschen Einheit 1
GERMANY
[2]LOGE Deutschland GmbH
Burger Chaussee 25
03044 Cottbus
GERMANY

Klaus.Mueller@b-tu.de https://www.b-tu.de/en/angewandte-physik-sensorik

Abstract: - For a complete transition from fossil to CO_2 neutral energy supply new energy storage concepts are needed that allow energy supply in times of absence of regenerative power production as during dark doldrums. A promising renewable energy storage approach is the power to gas (to power) technique based on the production of synthetic natural gas (also called e-methane) by methanation of CO_2 with H_2. The latter is usually produced by electrolysis. In any power to gas concept, electrolysis is a very critical part, due to its high costs, stability issues, or limited power of required electrolysers.
As an alternative source of hydrogen, we investigate the methanation of coke oven gas (COG). COG is a byproduct of the carbon rich coke production from coal for the steel industry, with a high amount of hydrogen (~60vol%). Coke oven gas furthermore contains CH_4 (~25vol%), CO (5-8vol%), and CO_2 (1-3vol%), making it an attractive feedstock for the production of synthetic energy carriers like methane. In the present study, the authors investigate the direct conversion of CO and CO_2 from COG into e-methane. Compared to stoichiometric conversion, the COG hydrogen content is too high for catalytic methanation of CO_2. In order to achieve a higher methane yield, the addition of CO_2 from air, flue gas, or coal gasification can compensate the surplus of hydrogen in the coke oven gas.
The process is evaluated by the conversion of CO and CO_2, the catalyst selectivity towards higher hydrocarbons for varying temperatures, and the CH_4 yield.

Key-Words: - Coke Oven Gas, CO_2 recycling, Power to Gas (PtG), Synthetic Natural Gas (SNG), e-methane, Sabatier-Reaction

1 Introduction

Against the background of a global reduction of the greenhouse gas CO_2 a transition from fossil to renewable energy sources is inevitable. New concepts for energy supply and storage are needed in order for this transition to become successful. A promising approach for a CO_2 neutral production circle is the conversion of CO_2 into e-methane, commonly known as methanation. Methanation opens an opportunity for a reintegration and reuse of CO_2 in a recycling process in the form of so-called synthetic natural gas (SNG). In such a "power-to-gas" approach (PtG), hydrogen and methane store energy that can be used in times of absence of regenerative power production as during dark doldrums. Compared to other renewable energy storage concepts such as electric storage systems the PtG approach does not require any investments in storage infrastructure as the existing natural gas grid can be used for the storage of SNG.
In order to ensure a CO_2 neutral process, the H_2 for the hydrogenation of CO_2 must be renewably generated. For a hydrogen production at the required industrial scale, alkaline-based or proton exchange membrane (PEM) water electrolysis is necessary. Alkaline-based electrolyzers are the most commonly used electrolyzers and exhibit a power of up to 3.5MW with a corresponding hydrogen production of 760Nm^3/h [1]. For hydrogen production at a lower scale, PEM electrolyzers are commercially available. The maximal hydrogen production rate for PEM electrolyzers is in the order of 30 Nm^3/h while the power consumption amounts to 174 kW [2].

Besides hydrogen from water electrolysis, coke oven gas (COG) represents a promising alternative hydrogen source. COG is a byproduct formed during carbon rich coke production for the steel industry. Cleaned COG contains a high amount of hydrogen (~60vol%) and furthermore CH_4 (~25vol%), CO (5-8vol%), and CO_2 (1-2 vol%). Basically, raw COG is purified prior to its further use. During a first purification step most of the tar components and NH_3 are removed by cooling down the raw COG. Thereafter the residual NH_3 is removed by water washing. During the last purification step H_2S is eliminated by desulfurization with NH_3 followed by a subsequent Claus-reaction [3, and citations herein].

Cleaned COG has a heating value of 19.9MJ/m³ [4, 5]. Most of the cleaned COG is reused as fuel in the coke ovens. The residual amount of COG is used in further process steps in the steel mill or simply burnt away [6].

The annual COG production in China in 2007 is estimated at 70 billion Nm^3 [3], which represents approximately 60% of the total global COG production. Compared to hydrogen production by water electrolysis, coke oven gas has an enormous potential as starting material for cheap mass production of e-fuels like e-methane or e-methanol. On the one hand, COG can be used for CH_4 enrichment by a catalytic methanation of the CO/CO_2 fraction. By this, the COG heating value increases and the CO fraction is reduced. This process does not require any additional gases. The CH_4 enrichment is a promising opportunity for industrial application. On the other hand, COG can be regarded as a hydrogen source for instance in a catalytic Sabatier process. In order to fully convert the hydrogen to methane additional CO_2 needs to be provided. If exhaust CO_2 emitted by a lignite power plant, a refinery, or a cement production plant is used as CO_2 source, this makes the synthetic natural gas (SNG) production a recycling process.

Given a pure and stoichiometric CO_2 and H_2 mixture, we have the total Sabatier reaction

$$CO_2 + 4H_2 \rightarrow CH_4 + 2H_2O \qquad \Delta H_{298K} = -165 kJ/mol$$

This reaction is thermodynamically favored for the given educt gas composition, but is limited in kinetics. Catalysts are required to achieve acceptable conversion from CO_2 into CH_4. Common catalysts for the Sabatier reaction are based on noble metals, nickel and its oxide, or the combination of them all on different substrates such as Al_2O_3, SiO_2, MgO, CaO [7]. The typical temperature range for the Sabatier process is 300-400°C, ensuring a high conversion rate and a minimum of side reactions, and thus a high selectivity towards methane [8].

Table 1: Composition of cleaned COG [6, 9]

Species	vol%
CH_4	23-27
H_2	55-60
CO_2	1-2
CO	5-8
N_2	3-6
HC other than CH_4	≈1.5

Regarding the composition of COG (Table 1) with additional CO in the educt gas, we have to consider the following main competitive reactions, depending on the ratio H_2:CO [10, 11]:

$$CO + 3H_2 \rightarrow CH_4 + H_2O \qquad \Delta H_{298K} = -206.2 kJ/mol \qquad (1)$$

$$2CO + 2H_2 \rightarrow CH_4 + CO_2 \qquad \Delta H_{298K} = -247.3 kJ/mol \qquad (2)$$

$$CO_2 + 4H_2 \rightarrow CH_4 + 2H_2O \qquad \Delta H_{298K} = -165.0 kJ/mol \qquad (3)$$

$$CO + H_2O \rightarrow CO_2 + H_2 \qquad \Delta H_{298K} = -41.2 kJ/mol \qquad (4)$$

$$2CO \rightarrow C + CO_2 \qquad \Delta H_{298K} = -172.54 kJ/mol \qquad (5)$$

$$nCO + (2n+1)H_2 \rightarrow C_nH_{2n+2} + nH_2O \qquad (6)$$

$$nCO + (2n)H_2 \rightarrow C_nH_{2n} + nH_2O \qquad (7)$$

The production of stable surface carbon according to equation (5) is associated with a deactivation of the catalyst and has to be avoided. The last two equations (6, 7) represent the general expressions for the production of higher hydrocarbons such as ethane (C_2H_6, (6)) or ethene (C_2H_4, (7)).

A challenge for the use of COG is a residual content of $<3.2 \times 10^{-5}$vol% H_2S after the conventional cleaning process [6]. As known in literature, even traces in the range of a few ppm can be poisonous for Ni based catalysts [12]. In order to characterize the actual catalytic process and its dependencies for instance on the CO content, only inlet gases without any H_2S contamination are used in the present study. Also, the influence of hydrocarbons other than methane in the COG is not investigated.

The present investigation of COG as a precursor for the Sabatier process has to be regarded in the context of our earlier strategy of a “direct” CO_2 methanation of industrial flue gas. Here, the CO_2

component of flue gas is directly converted into a product, without any separation/enrichment of CO_2. We already show the proof of principle for oyxfuel CO_2 from a brown coal power plant [13], for oxyfuel CO_2 stored in a saline aquifer [14], and for flue gas directly from a lignite power plant, in laboratory and in an upscaled version [15, 16].

After condensation and desulfurisation, flue gas from a power plant contains around 80% N_2, 15% CO_2 and 5% O_2 and traces of SO_2 and NO_x in the ppm range. These experiments have been carried out on supported nickel-based catalysts on a combined silica/alumina substrate. Here, a selectivity of CO_2 towards methane near 100% with a conversion rate of around 85% has been observed. Furthermore, the catalysts showed a long time stability of 40 days without significant changes in performance [15, 16]. These catalysts are also used for the experiments with COG.
In the present work, in a first step, methanation experiments with a stoichiometric ratio of H_2:CO_2=4:1 are performed without any further components in the gas. As a second step, a representative mixture of synthetic COG is used. In a third step, additional CO_2 is mixed to the COG to receive a ratio of H_2:CO_2=4:1 for the stoichiometric Sabatier reaction.

2 Experimental

The experiments are performed in a fixed bed reactor at laboratory scale with a reactor dimension of 8mm in diameter and 100mm in length. A schematic illustration of the reactor setup is given in figure 1. All experiments are performed at atmospheric pressure inside the reactor chamber. The flow rate amounts to 50 ml/min for the experiments without additional CO_2 and 53ml/min for experiments with additional CO_2. In order to study the temperature dependency of the COG conversion, the experiments are performed at different temperatures. The temperature is increased stepwise by 10K between 160 and 350°C and each time kept constant during 1h. The temperature inside the reactor is measured with a thermocouple.
The methanation reaction is performed with a nickel-based catalyst supported on SiO_2/Al_2O_3 substrate, delivered from Sigma Aldrich (BET: 190m²/g, 65wt% Ni). To prevent hot spots and sintering effects due to elevated temperatures resulting from the exothermic reaction, 0.4g of the supported catalyst material are diluted in a quartz sand bed with a mass of 7g. The catalyst and the bed material have approximately the same grain size.

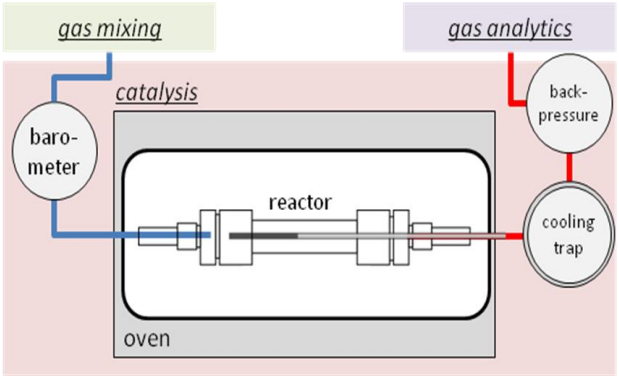

Colour online

Fig. 1. Schematic illustration of the reactor setup for the experiments with COG.

Both, gas flow and gas mixture are adjusted by mass flow controllers. The gas composition is measured with two methods, by infrared-sensors and a mass spectrometer. A more detailed description of our setup is given in [8, 15].
The COG used in our experiments is a mixture (Air Liquide, CRYSTAL) with a composition of 60% H_2, 25% CH_4, 7% CO, 4% CO_2 and 4% N_2. The total gas flow during the experiments is 50ml/min COG (respectively 30ml/min H_2, 12.5ml/min CH_4, 3.5ml/min CO, 2ml/min CO_2, and 2ml/min N_2).
For the experiments with CO_2 compensation 2.9ml/min CO_2 are added to 50ml/min synthetic COG in order to obtain a stoichiometric H_2/CO_2 ratio. Here, it is assumed that hydrogen preferably reacts according to equations (1) and (3) while 3*3.5ml/min CO+4*2.0ml/min CO_2 = 18.5ml/min H_2 are consumed. For the Sabatier reaction (3) with the residual hydrogen (11.5ml/min) an additive of 2.9ml/min CO_2 is needed.
For simplicity, the educt gas composition with synthetic COG and an additive of 2.9ml/min CO_2 is called "Sabatier-mixture" in the further text.

3 Results

3.1 Pure H_2/CO_2

Figure 2 depicts the experimental results for pure CO_2 and pure H_2 at a stoichiometric ratio of H_2:CO_2 of 4:1. This experiment is considered as reference experiment. The catalytic performance is characterized by the conversion X of CO_2, the yield Y of CH_4 and the selectivity S for CH_4 as defined in equations 8-10 depending on the gas flows $\dot{n}_{Gas,in/out}$ according to standard definitions [17].

$$X_{CO_2} = (\dot{n}_{CO_2,in} - \dot{n}_{CO_2,out}) / \dot{n}_{CO_2,in} \quad (8)$$

$$Y_{CH_4} = \dot{n}_{CH_4,out} / \dot{n}_{CO_2,in} \quad (9)$$

$$S_{CH_4} = \dot{n}_{CH_4,out} / (\dot{n}_{CO_2,in} - \dot{n}_{CO_2,out}) \quad (10)$$

As shown by the solid line in figure 2, the equilibrium CO_2 conversion of 90% is reached at 330°C. As the reactor typically shows a pressure drop of around 1bar and simultaneously a minimum reactor pressure of 1 bar is required, the results are shown for an inlet pressure of 2bar. The selectivity of the reaction reaches nearly 100% at 300°C. At higher temperatures (>450°C) CO production due to the reversed water gas shift (RWGS) reaction $CO_2 + H_2 \rightarrow CO + H_2O \ (\Delta H_{298K} = 41.2 kJ/mol)$ is measured. At temperatures above 450°C the selectivity slightly drops. At temperatures lower than 300°C, lower selectivity may be explained by a suppressed kinetics.

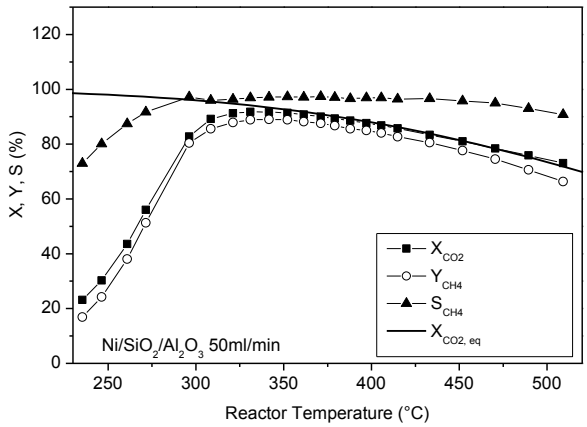

Fig. 2. Pure H_2 and CO_2, without COG: Temperature dependence of conversion X, yield Y and selectivity S for an educt gas stream in a stoichiometric ratio of H_2:CO_2=4:1, compared to the chemical equilibrium at 2bar (solid line).

3.2 Coke oven gas (COG)

Figure 3 compares the conversion of CO_2 for all three setups: the synthetic COG and for the Sabatier-mixture, compared to the experiments with CO_2 and H_2 as sole input (Figure 2). During conversion of synthetic COG, the highest CO_2-conversion of nearly 100% is already reached at a temperature of 260°C. Thus, regarding CO_2-conversion, the direct conversion of COG represents the most efficient of the three presented experimental setups. Figure 3 further illustrates that the temperature dependence of CO_2-conversion is nearly identical for the Sabatier-mixture and for the reference educt gas composition of H_2:CO_2=4:1. Thus nearly the same maximum conversion of nearly 90% is reached at around 300°C in both cases. A small shift in the maximum of approximately 10°C (but same value for X) should be due to the precision of the temperature measurement or reproducibility in preparation.

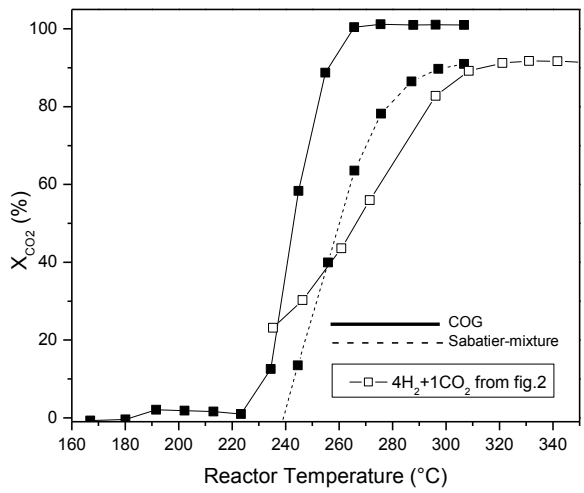

Fig. 3. Temperature dependence of the CO_2-conversion X_{CO2} for COG, the Sabatier-mixture, in relation to the reference performance from figure 2. The main reason for the efficient CO_2-conversion when using pure COG is a shift of the thermodynamic equilibrium towards higher CO_2-conversions at lower temperature due to the H_2-surplus in the inlet gas [16].

In figure 4, we also show the conversion of the CO component in the COG, in relation to the CO_2-conversion. The conversion of CO is expressed as equation (8), but now with $\dot{n}_{CO,in/out}$.

Concerning the CO-conversion, both experiments with COG show a maximum conversion of nearly 100% at 235°C. This indicates a preferred reaction of CO according to equations (1), and (2) at temperatures below 235°C and a subsequent Sabatier reaction according to (3) at temperatures higher than 235°C. Regarding the pure COG at first, we find the CO-component already consumed before the CO_2 conversion sets in. This insight is used when determining the composition of the "stoichiometric" COG, the Sabatier-mixture with additional 2.9ml/min CO_2, see experimental part.

This behavior is confirmed by investigations of [18, 19] for Ru, Rh, Pt and Pd catalysts. For CO/CO_2, it was shown, that hydrogenation of CO is the preferred reaction until a certain temperature is reached, depending on the catalyst.

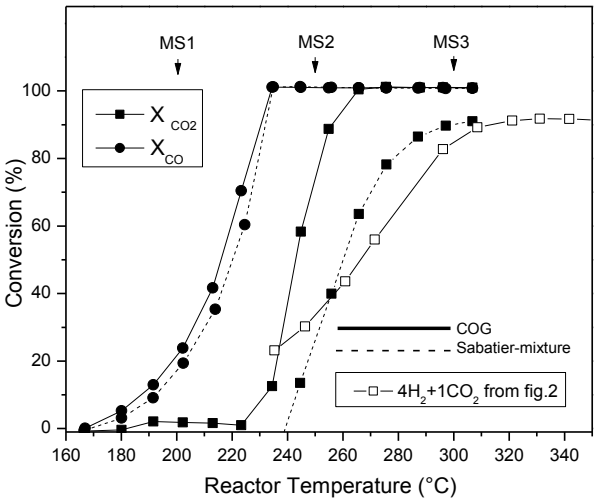

Fig. 4. Conversion of CO (circles) and of CO_2 (squares) versus the temperature of the reactor. The full lines represent the direct conversion of COG, the dashed lines are representative for the conversion of the Sabatier-mixture. The arrows at 200°C, 250°C, 300°C indicate the temperatures for the mass spectra MS1, MS2 and MS3 in figure 5.

A significant selectivity for higher hydrocarbons as ethylene (C_2H_4), ethane (C_2H_6), propene (C_3H_6) or propane (C_3H_8) is known for noble metal catalysts, at temperatures below 350°C [18, 19]. In order to determine the yield of CH_4, we perform an analysis of the product gas composition with mass spectrometry.

These mass spectra for COG are shown in figure 5A and for the Sabatier-mixture in figure 5B. We show the spectra at three different reactor temperatures, at 200°C, at 250°C and 300°C.

The formation of higher hydrocarbons is confirmed by those measurements. At a temperature of 200°C, the signature of higher hydrocarbons is clearly visible for both measurements (A, B) as a sequence of peaks at around 57, 71 and 85amu, split by 14amu. This sequence can be assigned to the presence of hydrocarbons like buthene (56amu, C_4H_8), buthane (58amu, C_4H_{10}), pentene (70amu, C_5H_{10}), pentane (72amu, C_5H_{12}), or even hexene (84 amu, C_6H_{12}) and hexane (86 amu, C_6H_{14}).

At a temperature of 250°C, only a signature of buthene/buthane at 56 and 58amu is present. At 300°C, also those peaks are vanished.

In the temperature interval between 200°C, 250°C and 300°C, the signals of different species of lower masses are superposed: at around 44amu, we have are propane (44amu, C_3H_8) and/or propene (42amu, C_3H_6), and residuals of CO_2 (44amu). The signal of around 28amu may be assigned to CO (28amu) and to ethane (30amu, C_2H_6) and ethene (28amu, C_2H_4).

The main peak around 16amu is of course attributed to CH_4.

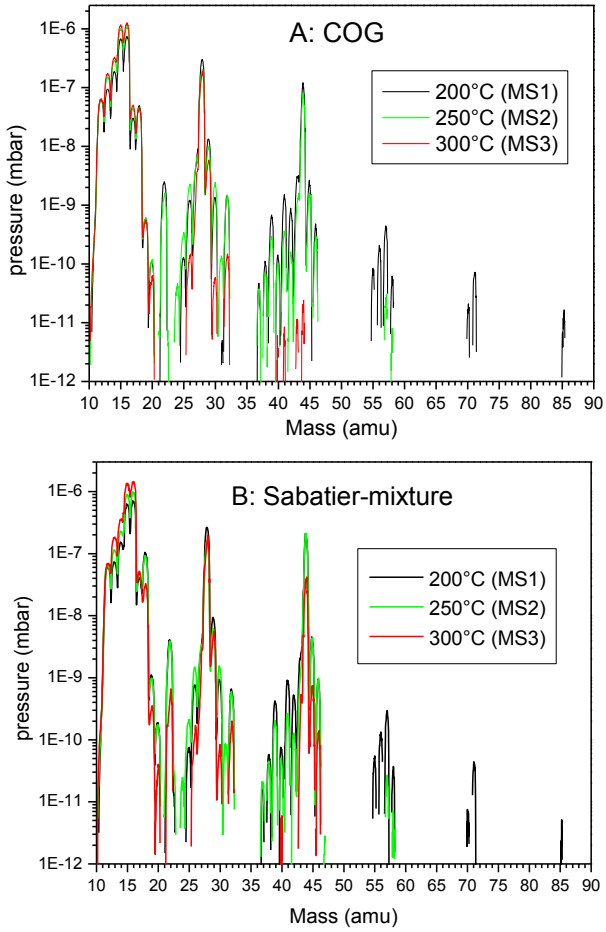

Colour online

Fig. 5. Mass spectra recorded at 200°C, 250°C and 300°C see figure 4: A: for synthetic COG. B: for the Sabatier-mixture.

A further superposition at 44amu and lower is caused by fragments of higher hydrocarbons. For instance, buthane with 58amu has a main peak at 43amu, and only 12% of this main peak is located at 58amu [20].

If we compare the order of magnitude of the main peak around 16amu (CH_4) with the group at around 56/58amu, which is attributed to higher hydrocarbons, we find a high selectivity towards methane for all temperatures. Even for a low reactor temperature of 200°C, we find a ratio of $p_{16amu}/p_{56/58amu}=10^4$.

Thus, the selectivity for the formation of hydrocarbons such as buthane is very low for both, the pure COG and for the Sabatier-mixture. Or, in a reverse way, the selectivity towards methane is near 100%, in both cases.

We have only one significant difference for pure COG and for the Sabatier-mixture. A comparison of

figure 5A and 5B reveals that the residual peaks around 44amu at 300°C are lower for pure COG than for the Sabatier-mixture. This results from the lower CO_2-conversion for the Sabatier-mixture compared to pure COG as depicted in figure 4. The remaining CO_2 in the educt gas causes residual peaks at around 44amu as shown in figure 5B.

The main result of the mass spectroscopic analysis is a selectivity near 100% towards methane over the temperature range from 200°C up to 300°C, only with residuals of higher hydrocarbons.

In such a case, the calculation of the yield of methane is simplified into $Y_{CH_4} \approx X_{CH_4,}$ Because we have a combined reaction of CO and CO_2 into CH_4, we have to use the modified gas flows $\dot{n}_{CO,CO_2\,in} = \dot{n}_{CO_2,in} + \dot{n}_{CO,in}$ and $\dot{n}_{CO,CO_2\,\mathrm{out}} = \dot{n}_{CO_2,out} + \dot{n}_{CO,out}$ With a selectivity of $S_{CH4} = (\dot{n}_{CH_4,out} - \dot{n}_{CH4,in}) / (\dot{n}_{CO,CO_2,out} - \dot{n}_{CO,CO_2,in}) = 1$, the methane yield Y_{CH4} is given by

$$Y_{CH4} = \frac{\dot{n}_{CO,CO2,in} - \dot{n}_{CO,CO2,out}}{\dot{n}_{CO,CO2,in}} = X_{CO,CO2} \quad (11)$$

only from the CO, CO_2 flows. This is an advantage, because if the CH_4 content is measured in our infrared sensing system for the yield, the signal could be distorted. The infrared-filter used for the identification of CH_4 selects a range of 2900-3050 cm^{-1} in wavenumbers. This is also the typical absorption range of hydrocarbons like ethylene (C_2H_4), ethane (C_2H_4), propene (C_3H_6), propane (C_3H_6) and higher [20]. As the IR sensor is not calibrated for those hydrocarbons, the returned signal could be flawed.

The yield for Y=X as a function of the reactor temperature is shown in figure 6.

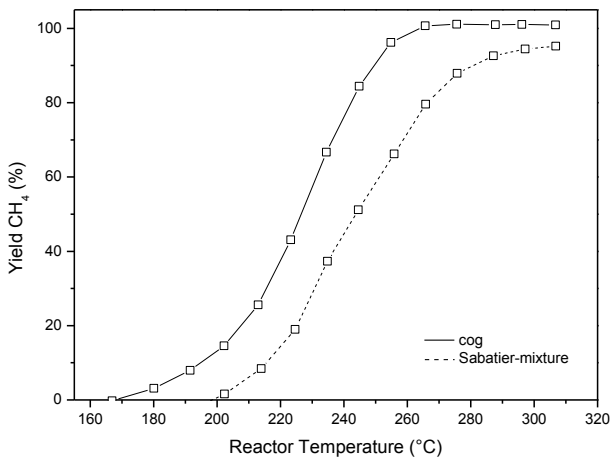

Fig. 6. Yield of CH_4 according to equation (11), for pure COG and for the Sabatier-mixture.

In synthetic COG, first the CO-component is converted into CH_4, according to equations (1) and (2). In a second step, the residual CO_2 reacts into CH_4 in a the Sabatier-process. The maximum in yield is reached already at 260°C, due to a shift in the equilibrium for a surplus of H_2.

Also for the Sabatier-mixture, the yield of CH_4 is higher at low temperatures than 260°C than for clean CO_2 and H_2 (Reference, figure 2). For instance, the reference yield for 250° (figure 2) is only 25% and for the Sabatier-mixture, we find a value near 90%. Of course, this is due to the consumption of H_2 and CO into CH_4 for lower temperatures as 260°C. The CH_4 production is assigned to equations (1, 2) of the chemical reaction scheme. Thus in the case of a certain CO amount in the inlet gas, the expected methane yield is higher than for CO_2 as sole carbon source.

To summarize: Our Ni-based catalyst shows very high selectivities towards methane for synthetic COG and COG with an additional CO_2 input ("Sabatier-Mixture). The CO/CO_2 component of synthetic COG is completely converted into CH_4 at a temperature of 260° for this catalyst. Also an additional CO_2 component is converted into methane, but according to the Sabatier-reaction (3) with lower equilibrium conversion and yield.

If we refer the catalytic performance of our Ni-based catalyst to literature data for different catalyst systems, based on noble metals, we have comparable values for selectivity or maximum conversion temperatures.

A study of the catalytic performance of Ru, Rb, Pt and Pd based catalysts on Al_2O_3 substrates for the methanation of CO, CO_2 in their mixture has been published by [18, 19]. It has been shown, that Ru is the most active catalyst for the hydrogenation of CO/CO2, but even for this catalyst, a significant selectivity from 20 to 5% for ethylene (C_2H_4), ethane (C_2H_6), propene (C_3H_6) or propane (C_3H_8) is measured in the temperature range from 225°C to 300°C. In contrast to COG, the feed composition was 1% CO, 15% CO_2 and 50% H_2 in He here [18].

4 Summary, Conclusion

COG may be used as an alternative source of hydrogen for the production of methane via conversion in a catalytic Sabatier process. Various inlet gas compositions have been compared with regard to their suitability for the Sabatier reaction under the given boundary conditions. As reference measurement, the conversion of a stoichiometric CO_2/H_2 mixture has been investigated followed by experiments with pure synthetic COG and COG

with added CO_2 in order to achieve a stoichiometric ratio of H_2/CO_2=4:1 for the Sabatier reaction ("Sabatier-mixture").

As catalyst for methanation, we use nickel catalysts supported on SiO_2/Al_2O_3 ceramics. The CO_2 conversion reaches nearly 100% at 260° in nickel-based catalysts. The selectivity towards methane is near 100% for synthetic COG and remains at this high level for COG with additional CO_2. When the inlet gas composition is adjusted to get a Sabatier-ratio of H_2/CO_2=4:1, the CO_2 conversion reaches 90% at 300°C. This opens opportunities for the application of cheap catalysts for either COG refinement or a reuse of CO_2 from combustion processes in power plants, steel production, or cement industry.

Acknowledgements

We acknowledge for helpful discussions with J. Israel from BTU. The work is supported by the Federal Ministry for Economic Affairs and Energy (BMWi/ZIM) under grant ZF4510601ZG7.

References:

[1] A. Ursua, L. M. Gandia, and P. Sanchis , Hydrogen Production From Water Electrolysis: Current Status and Future Trends, *Proceedings of the IEEE*, Vol. 100, No. 2, 2012, p 410.

[2] Proton OnSite. [Online]. Available: http://www.protononsite.com

[3] Razzaq, C. Li , S. Zhang, Coke oven gas: Availability, properties, purification, and utilization in China, *Fuel*, Vol.113, 2013, pp 287–299.

[4] P. Basu, K. Cen, L. Jes, *Boilers and burners: design and theory*. Springer; 2000.

[5] H.S. Ray, B.P. Sing, S. Bhattacharjee, V.N. Misra, *Energy in minerals and metallurgical industries*, New Delhi: Allied Publishers; 2005.

[6] J.M. Bermudez, A. Arenillas, R. Luque, J.A. Menendez, An overview of novel technologies to valorise coke oven gas surplus. *Fuel Process Technol.* Vol.110, 2013, pp. 150-159.

[7] J. Ma, N. Sun, X. Zhang, N. Zhao, F. Xiao, W. Wie, Y. Sun, A short review of catalysis for CO_2 conversion, *Catal. Today*, Vol.148, 2009, p. 221.

[8] K. Müller, M. Städter, F. Rachow, D. Hoffmannbeck, D. Schmeißer, Sabatier- based CO_2-Methanation by Catalytic Conversion, *Environmental Earth Sciences*, Vol.70, No.8, 2013, pp. 3771-3778.

[9] H. Liao, B. Li, B. Zhang, Pyrolysis of coal with hydrogen-rich gases. 2. Desulfurization and denitrogenation in coal pyrolysis under coke-oven gas and synthesis gas, *Fuel*, Vol.77, 1998, pp. 1643–1646.

[10] J. Kopyscinski, T.J. Schildhauer, S.M.A. Biollaz, Methanation in a fluidized bed reactor with high initial CO partial pressure: Part I – experimental investigation of hydrodynamics, mass transfer effects and carbon deposition, *Chem. Eng. Sci.*, Vol.66, 2011, pp. 924–34.

[11] J. Sehested, S. Dahl, J. Jacobsen, J.R.R Nielsen, Methanation of CO over nickel: mechanism and kinetics at high H_2/CO ratios, *J. Phys. Chem. B*, Vol.109, 2005, pp. 2432–2438.

[12] E.J. Erekson, C.H. Bartholomew, Sulfur Poisoning of Nickel Methanation Catalysts, II. Effects of H_2S Concentration, CO and H_2O Partial Pressures and Temperature on Deactivation Rates, *Applied Catalysis*, Vol. 5, 1983, pp. 323-336.

[13] To be published in Reina, Odriozola, Arellano-Garcia (Eds.), *Engineering Solutions for CO2*, Elsevier, 2020.

[14] To be published in Reina, Odriozola, Arellano-Garcia (Eds.), *Engineering Solutions for CO2*, Elsevier, 2020.

[15] K. Müller, M. Fleige, F. Rachow, D. Schmeißer, Sabatier based CO_2-methanation of flue gas emitted by conventional power plants, *Energy Procedia*, Vol.40, 2013, pp. 240-248.

[16] K. Müller, F. Rachow, J. Israel, E. Charlafti, C. Schwiertz, D. Schmeißer, Direct Methanation of Flue Gas at a Lignite Power Plant, *International Journal of Environmental Science*, Vol.2, 2017, pp. 425-432.

[17] R. Dittmeyer: *Chemische Technik. Prozesse und Produkte*, Wiley-VCH-Verlag, Weinheim; 2006.

[18] P. Panagiotopoulou, D. I. Kondarides, X. E. Verykios, Selective methanation of CO over supported noble metal catalysts: Effects of the nature of the metallic phase on catalytic performance, *Applied Catalysis A: General*, Vol.344, 2008, pp. 45–54.

[19] P. Panagiotopoulou, D. I. Kondarides, X. E. Verykios, Selective methanation of CO over supported Ru catalysts, *Applied Catalysis B: Environmental*, Vol.88, 2009, pp. 470–478.

[20] NIST Chemistry WebBook, National Institute of Standards and Technology: http://webbook.nist.gov/chemistry/